MPT TOWER

A standard H30V truss is being used as vertical mastsection to support a sturdy sleeveblock that makes it possible to fit any of the 30 or 40 series trusses to all four sides, by means of bolted, either male or female CCS6 couplers.
The MPT sleeveblock is a fully bolted structural element, making it much stronger and more precise than conventional welded versions.
The top section and base section are built in such a way that it facilitates the easy use of either a handwinch or a chainhoist. The MPT tower is both cost effective and user friendly. All the trusses of the multi purpose range can easily be connected to the sleeveblock and they can be changed rather quickly. With a adapter plate it's also possible to use the sleeveblock with either S36R or S36V truss. There is also no need to buy a complete system if you already own multi purpose truss. Just buy the part you need.

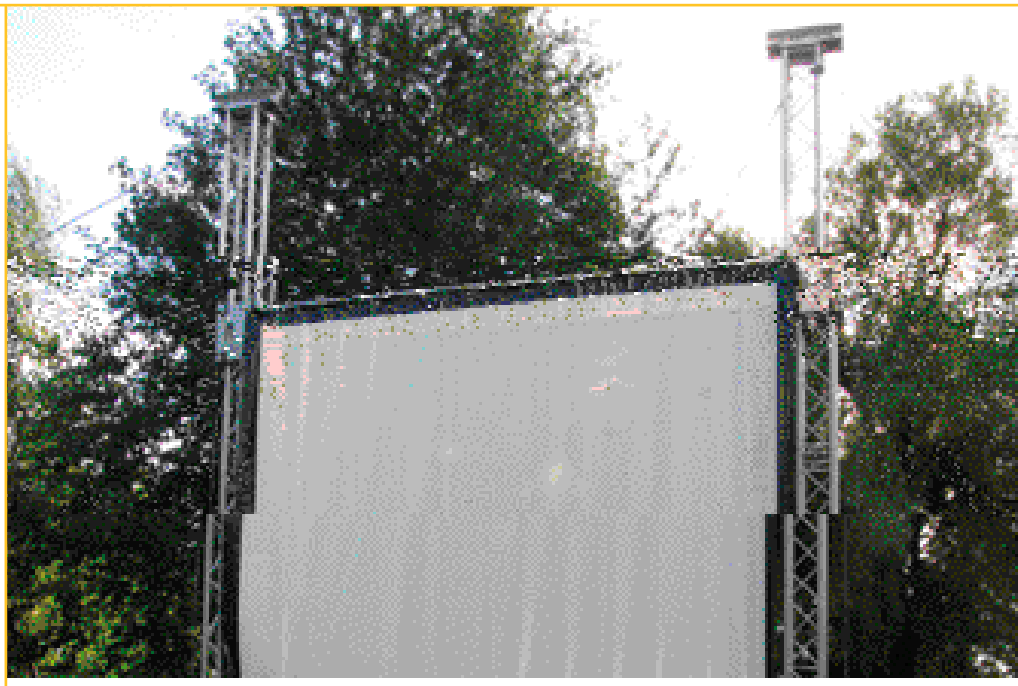

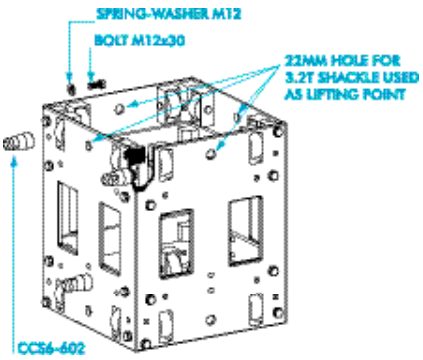

TECHNICAL SPECIFICATIONS MPT TOWER

max. height	7,50 m
max. loading capacity	1000 kg
max. load handwinch	750 kg
type mast sections	H30V
sleeveblock suitable for truss-series	X or H30D, X or H30V, X or H40D and X or H40V, S36R, S36V
alloy alu parts	EN-AW 6082 T6
coupling system tower	CCS6 series
self weight	115 kg

ALLOWABLE CANTILEVER LOAD FOR MPT-010 SLEEVE BLOCK

lenght (L)	H40V X40V PL (kg)	H40D X40D PL (kg)	H30V X30V PL (kg)	H30D X30D PL (kg)
0,5	400	160	400	130
1	200	80	200	65
1,5	130	50	130	40
2	100	40	100	30

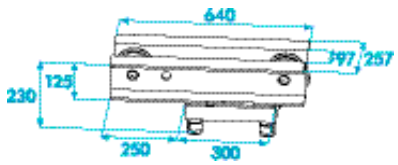

Top section MPT-009
pulley suitable for 6mm chain of
1 ton hoist or 8 mm steelwire.

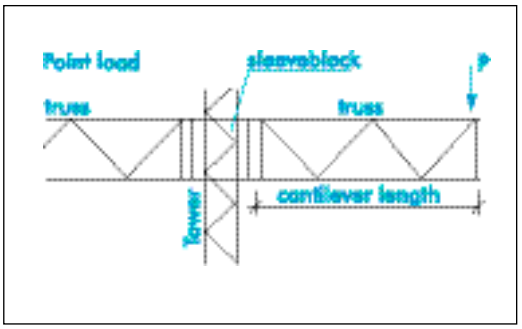

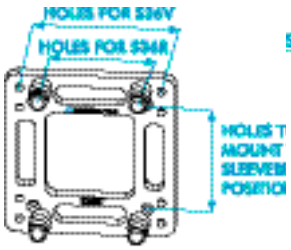

Adapter plate for S36R or S36V truss
WLL 1000kg

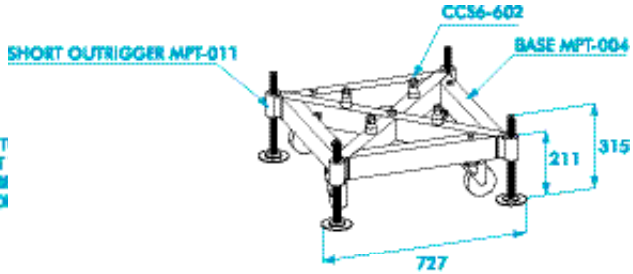

MPT-004 Base
MPT-014 Handwinch

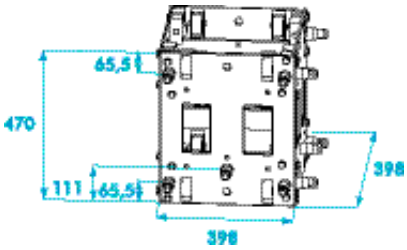

Sleeveblock MPT-010

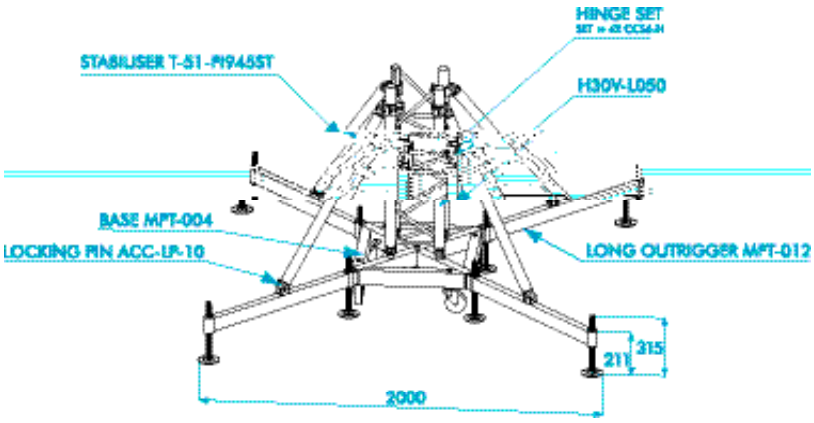

MPT-004 Base with MPT-012 long outriggers

1 The black coated, steel base (MPT-004) is equipped with 4 castors and four half conical couplers (CCS6-602) for the attachment of the mast section. The base can be used with either short outriggers (MPT-011) or long outriggers (MPT-012)

2 To secure the outriggers within the base, a trigger pin is placed on the inside of the baseframe. Pull the pinn outwards when mounting the outriggers.

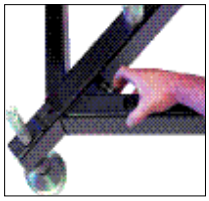

3 Disassemble the hinge-set, mount the half hinges to both the mast sections (H30V truss). Male and female connections should be mounted diagonally (as shown in the picture), in order to facilitate the erection the mast.

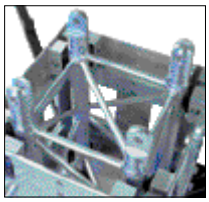

4 A complete mounted hinge set. First locate the truss pins to one side, the truss now works as a hinge and can be erected easily. Then locate the remaining truss-pins in the other side to fix the mast into position. A complete hinge-set consists of 4 x CCS6-H (hinge-set MPT•ST tower)

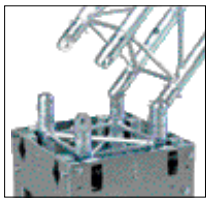

5 Unscrew the screwjacks in the outriggers, make sure that the castors of the base are free of any load. The complete load of the base should be supported by the screwjacks. Level the base by adjusting the screwjacks. The base must be perfectly levelled before the mast is erected. Long outriggers are needed for structures with three towers or less.

6 To use the MPT tower in combination with a chain hoist, Prolyte provide the motor attachment (MPT-041). This supplementary component can be attached to the base and has a fixing for the chain hoist hook.

7 The sleeve block is lifted by use of a chain hoist or a hand winch. Chain hoists can be mounted with the help of the motor attachment (MPT-041). Chain hoists can also be mounted to the grid and sleeveblock. WLL 1000 kg.

8 Prolyte advises that during storage and transportation the MPT towers are mounted as an assembly of the following components; base section, 50 cm mast section, sleeveblock, hinges and top section. This combination facilitates fast, efficient loading and building of the towers (size 60 x60 x115 cm, weight +/- 115kg).